CUI INC
a bel group

SERIES: PYB10-DIN | **DESCRIPTION:** DC-DC CONVERTER

FEATURES

- up to 10 W isolated output
- industry standard pinout
- 4:1 input range (9~36 V, 18~75 V)
- smaller package
- single/dual regulated outputs
- 1,500 Vdc isolation
- continuous short circuit, over voltage protection
- reverse polarity protection
- temperature range (-40~85°C)
- six-sided metal shielding
- efficiency up to 88%
- EN/BS EN 62368-1 certified

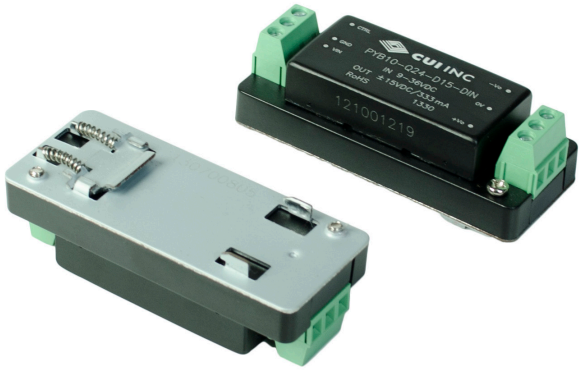

MODEL

MODEL	input voltage typ (Vdc)	input voltage range (Vdc)	output voltage (Vdc)	output current min (mA)	output current max (mA)	output power max (W)	ripple and noise[1] max (mVp-p)	efficiency typ (%)
PYB10-Q24-S3-DIN[2,*]	24	9~36	3.3	120	2400	8	80	77
PYB10-Q24-S5-DIN[2]	24	9~36	5	100	2000	10	80	80
PYB10-Q24-S12-DIN[2,*]	24	9~36	12	42	833	10	80	84
PYB10-Q24-S15-DIN[2,*]	24	9~36	15	33	667	10	80	85
PYB10-Q24-S24-DIN[2]	24	9~36	24	21	416	10	80	85
PYB10-Q24-D5-DIN[2,*]	24	9~36	±5	±50	±1000	10	80	81
PYB10-Q24-D12-DIN[2,*]	24	9~36	±12	±21	±416	10	80	84
PYB10-Q24-D15-DIN[2,*]	24	9~36	±15	±16	±333	10	80	86
PYB10-Q48-S3-DIN*	48	18~75	3.3	120	2400	8	80	77
PYB10-Q48-S5-DIN*	48	18~75	5	100	2000	10	80	80
PYB10-Q48-S12-DIN*	48	18~75	12	42	833	10	80	84
PYB10-Q48-S15-DIN*	48	18~75	15	33	667	10	80	85
PYB10-Q48-S24-DIN*	48	18~75	24	21	416	10	80	85
PYB10-Q48-D5-DIN*	48	18~75	±5	±50	±1000	10	80	81
PYB10-Q48-D12-DIN*	48	18~75	±12	±21	±416	10	80	84
PYB10-Q48-D15-DIN*	48	18~75	±15	±16	±333	10	80	86

Notes:
1. Ripple and noise are measured at 20 MHz BW by "parallel cable" method.
2. Model is not CE certified.
3. * Discontinued model.

PART NUMBER KEY

PYB10 - QXX - XXX - DIN

- PYB10: Base Number
- XX: Input Voltage
- X: Output S = single D = dual
- XX: Output Voltage
- DIN: Mounting Type DIN = DIN-rail mount

INPUT

parameter	conditions/description	min	typ	max	units
operating input voltage	24 V input models 48 V input models	9 18	24 48	36 75	Vdc Vdc
start-up voltage	24 V input models 48 V input models			9 18	Vdc Vdc
surge voltage	for maximum of 1 second 24 V input models 48 V input models	 -0.7 -0.7		 50 100	 Vdc Vdc
filter	pi filter				
CTRL[1]	models ON (CTRL open or connect high level, 3.5-12 Vdc)				
	models OFF (CTRL connect GND or low level, 0-1.2 Vdc)				
	input current (models OFF)		1	3	mA

Note: 1. CTRL pin voltage is referenced to GND.

OUTPUT

parameter	conditions/description	min	typ	max	units
line regulation	full load, input voltage from low to high		±0.2	±0.5	%
load regulation	5% to 100% load		±0.5	±1	%
cross regulation	dual output models: main output 50% load, secondary output from 10% to 100% load			±5	%
voltage accuracy			±1	±2	%
voltage balance[2]	dual output, balanced loads		±0.5	±1.5	%
switching frequency	PWM mode		350		KHz
transient recovery time	25% load step change		300	500	µs
transient response deviation	25% load step change		±3	±5	%
temperature coefficient	100% load			±0.03	%/°C

Note: 2. For dual output models, unbalanced load can not exceed ±5%. If ±5% is exceeded, it may not meet all specifications.

PROTECTIONS

parameter	conditions/description	min	typ	max	units
short circuit protection	continuous, automatic recovery				
over voltage protection		110	120	140	%Vo

SAFETY AND COMPLIANCE

parameter	conditions/description	min	typ	max	units
isolation voltage	for 1 minute at 1 mA max.	1,500			Vdc
isolation resistance	at 500 Vdc	1,000			MΩ
safety approvals	certified to 62368-1: EN, BS EN				
conducted emissions	CISPR22/EN55022, class A, class B (external circuit required, see Figure 1-b)				
radiated emissions	CISPR22/EN55022, class A, class B (external circuit required, see Figure 1-b)				
ESD	IEC/EN61000-4-2, class B, contact ± 4kV				
radiated immunity	IEC/EN61000-4-3, class A, 10V/m				
EFT/burst	IEC/EN61000-4-4, class B, ± 2kV (external circuit required, see Figure 1-a)				
surge	IEC/EN61000-4-5, class B, ± 2kV (external circuit required, see Figure 1-a)				
conducted immunity	IEC/EN61000-4-6, class A, 3 Vr.m.s				
voltage dips & interruptions	IEC/EN61000-4-29, class B, 0%-70%				
MTBF	as per MIL-HDBK-217F @ 25°C	1,000,000			hours
RoHS compliant	yes				

ENVIRONMENTAL

parameter	conditions/description	min	typ	max	units
operating temperature	see derating curve	-40		85	°C
storage temperature		-55		125	°C
storage humidity	non-condensing	5		95	%
case temperature	at full load, Ta=71°C			105	°C
vibration	10~55 Hz for 30 min. along X, Y and Z axis		10		G

MECHANICAL

parameter	conditions/description	min	typ	max	units
dimensions	76.0 x 31.5 x 25.8				mm
case material	aluminum alloy				
weight			64		g

MECHANICAL DRAWING

units: mm[inch]
tolerance: ±0.5[±0.020]

Wire range: 24~12 AWG
Mounts to TS35 rails

PIN CONNECTIONS		
PIN	Single Output	Dual Output
1	CTRL	CTRL
2	GND	GND
3	Vin	Vin
4	0V	-Vo
5	NC	0V
6	+Vo	+Vo

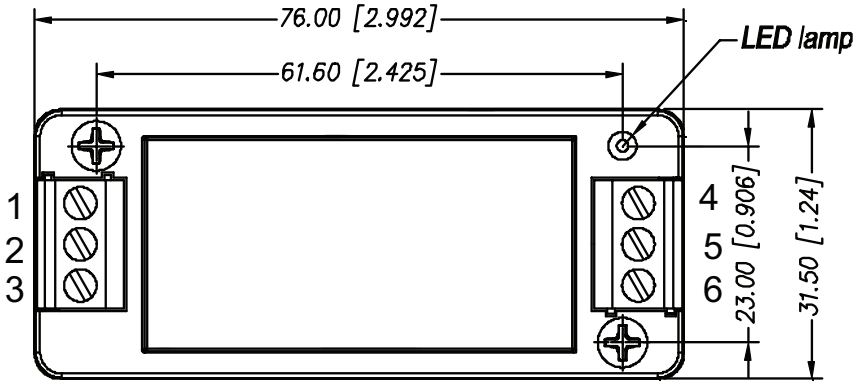

Top View

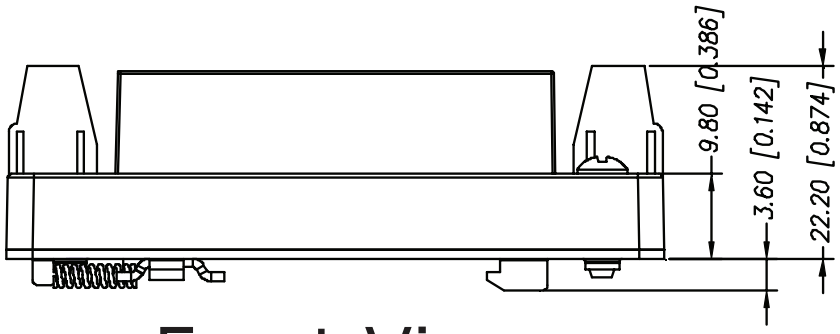

Front View

DERATING CURVES

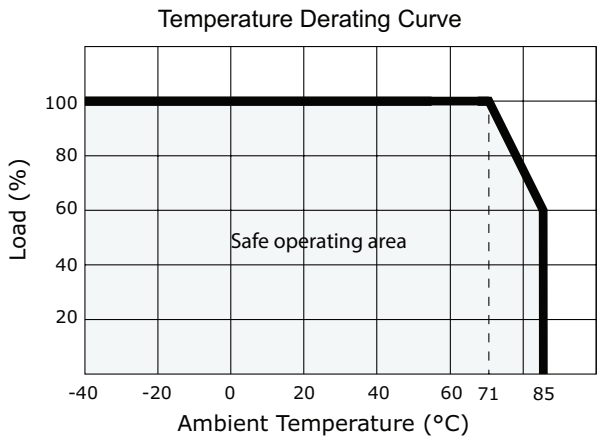

EMC RECOMMENDED CIRCUIT

Figure 1

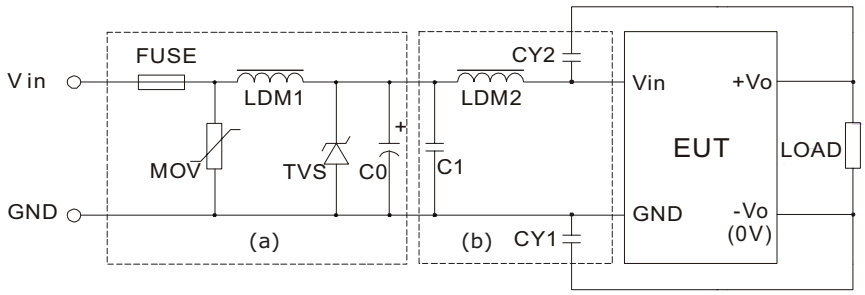

Table 1

Recommended external circuit components		
Vin (Vdc)	24	48
FUSE	Choose according to input current	
MOV	S14K35	S14K60
LDM1	56μH	56μH
TVS	SMCJ48A	SMCJ90A
C0	330μF/50V	330μF/100V
C1	1μF/50V	1μF/100V
LDM2	4.7μH	4.7μH
CY1	1 nF/2 KV	1 nF/2 KV
CY2	1 nF/2 KV	1 n/2 KV

TEST CONFIGURATION

Figure 2

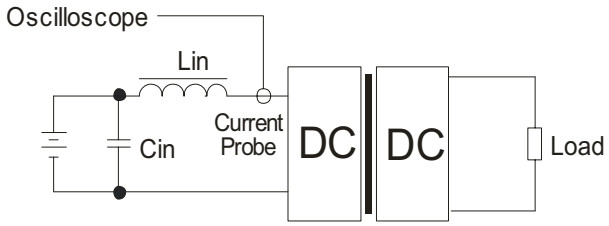

Table 2

External components	
Lin	4.7μH
Cin	220μF, ESR < 1.0Ω at 100 KHz

Note: Input reflected-ripple current is measured with an inductor Lin and Capacitor Cin to simulate source impedance.

APPLICATION NOTES

1. **Recommended circuit**
   This series has been tested according to the following recommended testing circuit before leaving the factory. This series should be tested under load (see Figure 3). If you want to further decrease the input/output ripple, you can increase the capacitance accordingly or choose capacitors with low ESR (see table 3). However, the capacitance of the output filter capacitor must be appropriate. If the capacitance is too high, a startup problem might arise. For every channel of the output, to ensure safe and reliable operation, the maximum capacitance must be less than the maximum capacitive load (see Table 4).

Figure 3

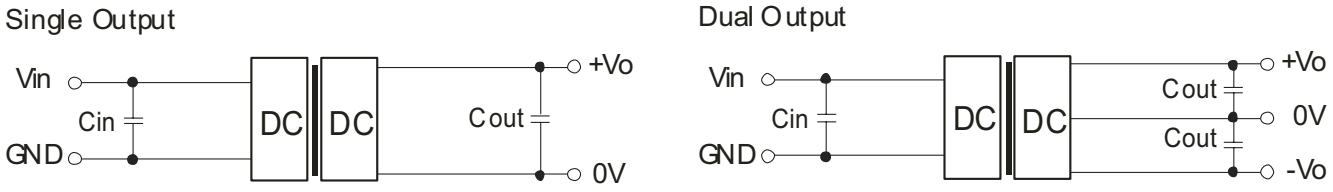

Table 3

Vin (Vdc)	Cin (μF)	Cout (μF)
24	10~47	10
48	10~47	10

Table 4

Single Vout (Vdc)	Max. Capacitive Load (μF)	Dual Vout (Vdc)	Max. Capacitive Load[4] (μF)
3.3	2200	--	--
5	2200	5	680
12	470[1]	12	220[3]
15	330[2]	15	100
24	100	--	--

Notes:
1. 330 μF for 48Vin.
2. 220 μF for 48Vin.
3. 150 μF for 48Vin.
4. For each output.

Notes:
1. Minimum load shouldn't be less than 5%, otherwise ripple may increase dramatically. Operation under minimum load will not damage the converter, however, they may not meet all specifications listed.
2. Maximum capacitive load is tested at input voltage range and full load.
3. All specifications are measured at Ta=25°C, humidity<75%, nominal input voltage and rated output load unless otherwise specified.

REVISION HISTORY

rev.	description	date
1.0	initial release	06/26/2013
1.01	updated spec	08/15/2013
1.02	safeties updated in features and safety approvals line	01/19/2021
1.03	discontinued model PYB10-Q24-S3-DIN, PYB10-Q24-S12-DIN, PYB10-Q24-S15-DIN, PYB10-Q24-D5-DIN, PYB10-Q24-D12-DIN, PYB10-Q24-D15-DIN, PYB10-Q48-S3-DIN, PYB10-Q48-S5-DIN, PYB10-Q48-S12-DIN, PYB10-Q48-S24-DIN, PYB10-Q48-D5-DIN, PYB10-Q48-D12-DIN, PYB10-Q48-D15-DIN	09/13/2022
1.04	CE certification updated for 24V models	11/25/2022
1.05	discontinued model PYB10-Q48-S15-DIN	12/14/2022

The revision history provided is for informational purposes only and is believed to be accurate.

CUI INC
a bel group

Headquarters
20050 SW 112th Ave.
Tualatin, OR 97062
800.275.4899

Fax 503.612.2383
cui.com
techsupport@cui.com

CUI offers a two (2) year limited warranty. Complete warranty information is listed on our website.

CUI reserves the right to make changes to the product at any time without notice. Information provided by CUI is believed to be accurate and reliable. However, no responsibility is assumed by CUI for its use, nor for any infringements of patents or other rights of third parties which may result from its use.

CUI products are not authorized or warranted for use as critical components in equipment that requires an extremely high level of reliability. A critical component is any component of a life support device or system whose failure to perform can be reasonably expected to cause the failure of the life support device or system, or to affect its safety or effectiveness.