CUI INC
a bel group

SERIES: VHK150W | DESCRIPTION: DC-DC CONVERTER

FEATURES

- up to 150 W isolated output
- rugged metal enclosure with integrated heat sink
- 4:1 input range (9~36 Vdc, 18~75 Vdc)
- single output from 5~48 Vdc
- 1,500 Vdc isolation
- over current, over temperature, over voltage, and short circuit protections
- remote on/off
- efficiency up to 90%

MODEL	input voltage range (Vdc)	output voltage (Vdc)	output current max (A)	output power max (W)	ripple and noise[1] max (mVp-p)	efficiency typ (%)
VHK150W-Q24-S5	9 ~ 36	5	25	125	100	87
VHK150W-Q24-S12	9 ~ 36	12	12.5	150	150	86
VHK150W-Q24-S15	9 ~ 36	15	10	150	150	86
VHK150W-Q24-S24	9 ~ 36	24	6.5	156	240	86.5
VHK150W-Q24-S28	9 ~ 36	28	5.4	150	280	87
VHK150W-Q24-S48	9 ~ 36	48	3.12	150	480	84
VHK150W-Q48-S5	18 ~ 75	5	25	125	100	90
VHK150W-Q48-S12	18 ~ 75	12	12.5	150	150	88
VHK150W-Q48-S15	18 ~ 75	15	10	150	150	88
VHK150W-Q48-S24	18 ~ 75	24	6.5	156	240	87.5
VHK150W-Q48-S28	18 ~ 75	28	5.4	150	280	89
VHK150W-Q48-S48	18 ~ 75	48	3.12	150	480	87

Note: 1. Ripple and noise are measured at full load, 20 MHz BW with 10μF tantalum capacitor and 1μF ceramic capacitor across output.

PART NUMBER KEY

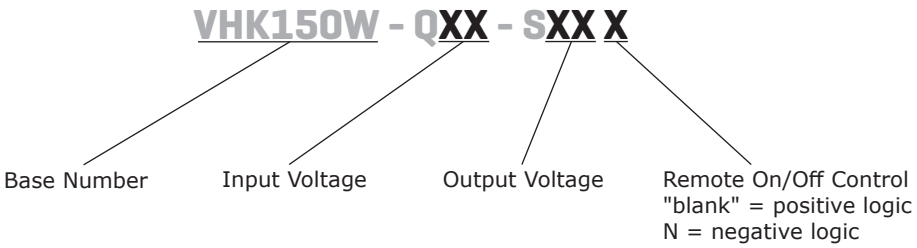

INPUT

parameter	conditions/description		min	typ	max	units
operating input voltage	24 Vdc input models 48 Vdc input models		9 18	24 48	36 75	Vdc Vdc
under voltage shutdown	24 Vdc input	power up power down		8.8 8		Vdc Vdc
	48 Vdc input	power up power down		17 16		Vdc Vdc
CTRL[1]	positive logic	models ON (>3.5 Vdc or open circuit)				
		models OFF (0~1.8 Vdc)				
	negative logic	models ON (0~1.8 Vdc)				
		models OFF (>3.5 Vdc or open circuit)				
filter	pi filter					
input fuse	30A time delay fuse for 24 Vin models, 15A time delay fuse for 48 Vin models					

Note: 1. Open collector refer to -Vin

OUTPUT

parameter	conditions/description	min	typ	max	units
maximum capacitive load	5 V output models 12 V output models 15 V output models 24 V input, 24 & 28 V output models 48 V input, 24 & 28 V output models 48 V output models	 47		30,000 12,500 10,000 1,800 2,200 1,000	µF µF µF µF µF µF
line regulation[2]	measured from high line to low line			±0.2	%
load regulation[2]	measured from full load to zero load			±0.2	%
voltage accuracy[2]				±1.5	%
adjustability			±10		%
switching frequency			250		kHz
transient response	25% step load change			500	µs
temperature coefficient			±0.03		%/°C

Note: 2. A 47 µF aluminum capacitor is required on the output for 48 Vdc output models.

PROTECTIONS

parameter	conditions/description	min	typ	max	units
short circuit protection	continuous				
over current protection	% nominal output current	110		140	%
over voltage protection		115		140	%
over temperature protection	shutdown		110		°C

SAFETY AND COMPLIANCE

parameter	conditions/description	min	typ	max	units
isolation voltage	for 1 minute: input to output; input to case; output to case	1,500			Vdc
isolation resistance		10			MΩ
RoHS	2011/65/EU (CE)				

ENVIRONMENTAL

parameter	conditions/description	min	typ	max	units
operating temperature	see derating curve	-40		85	°C
storage temperature		-55		105	°C

MECHANICAL

parameter	conditions/description	min	typ	max	units
dimensions	4.23 x 4.01 x 1.50 [107.5 x 101.8 x 38.0 mm]				inch
case material	steel and aluminum extrusion				
weight			502		g

MECHANICAL DRAWING

units: inch[mm]
general tolerance: ±0.04[±1.0]

wire range: 22~12 AWG
screw size: #6-32
connector tightening torque: 1.4 N·m (max)

PIN CONNECTIONS	
PIN	FUNCTION
1	-Vo
2	-S
3	trim
4	+S
5	+Vo
6	case
7	on/off
8	-Vin
9	+Vin

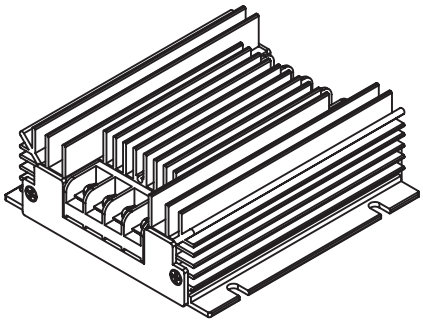

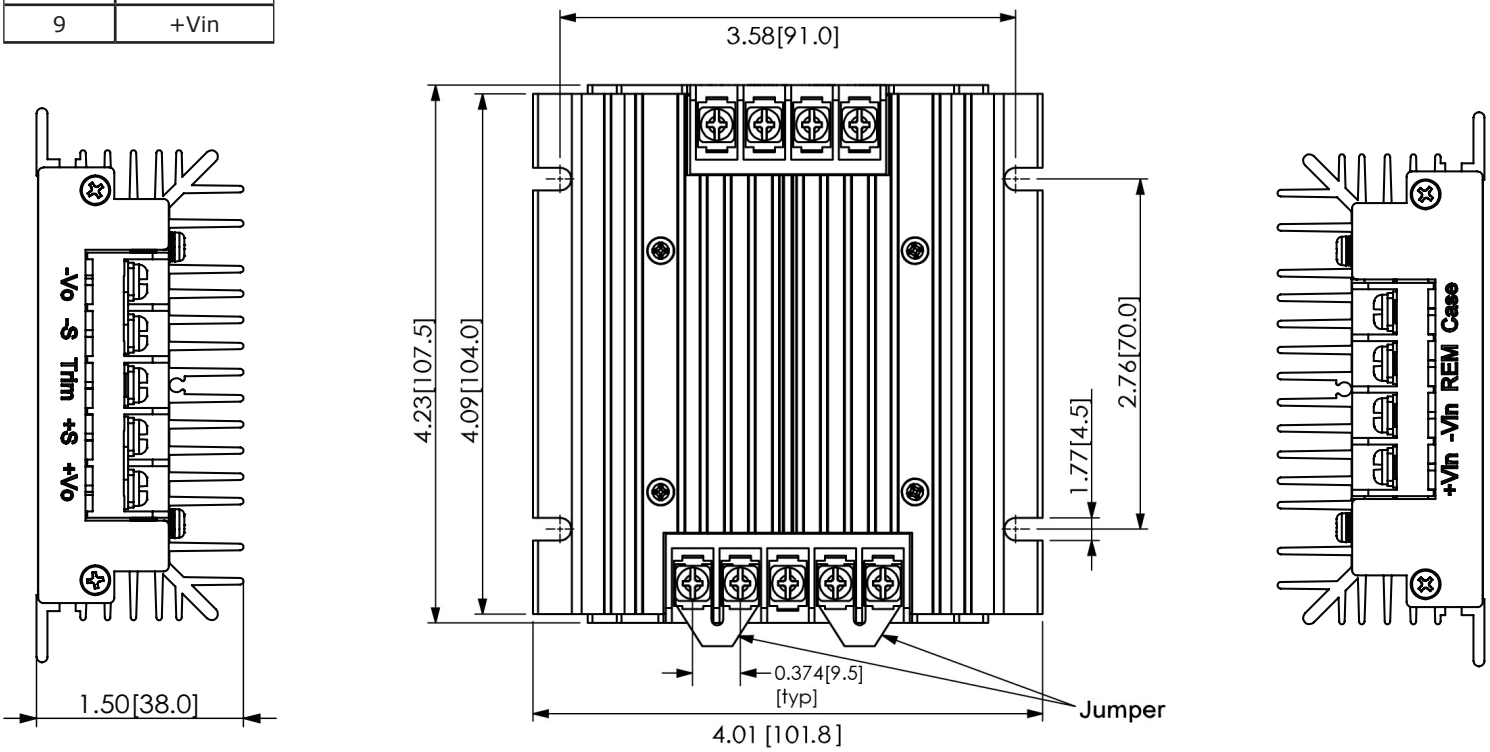

DERATING CURVES

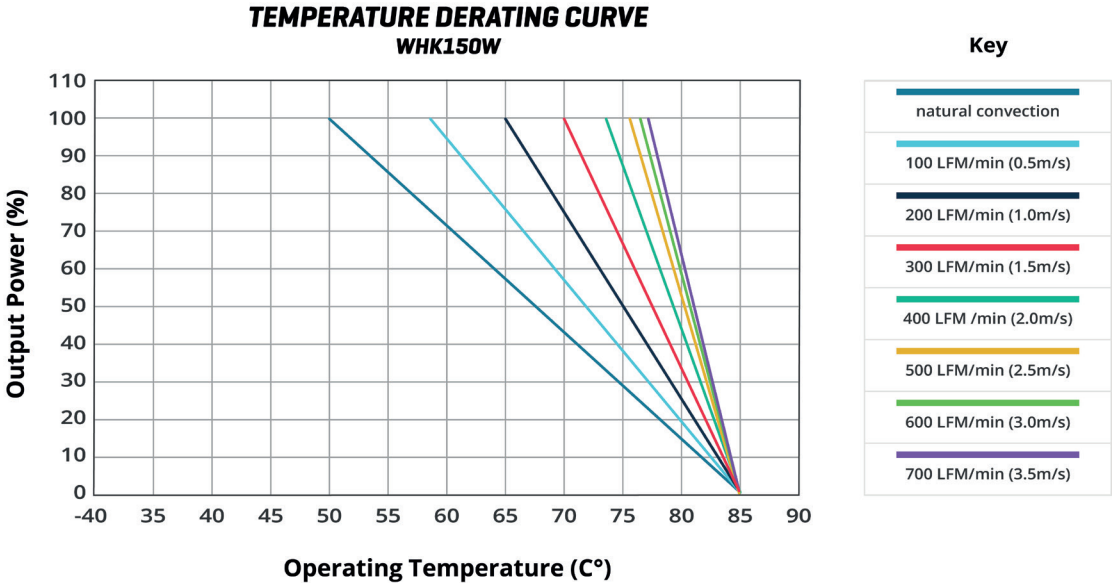

TEST CONFIGURATION

Figure 1

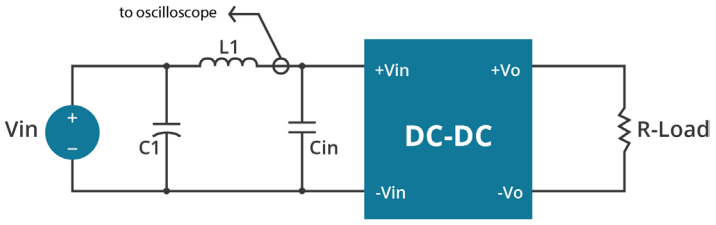

Table 1
External Components

24 Vdc input models	
L1	1.2μH
C1	220μF, ESR < 0.1Ω at 100 KHz
Cin	330μF, ESR < 0.7Ω at 100 KHz
48 Vdc input models	
L1	12μH
C1	220μF, ESR < 0.1Ω at 100 KHz
Cin	33μF, ESR < 0.7Ω at 100 KHz

Note: Input reflected-ripple current is measured with an inductor L1 and Capacitor C1 to simulate source impedance.

EMC RECOMMENDED CIRCUITS

EN55022 CLASS A

Figure 2
Recommended Circuit for EN55022 Class A

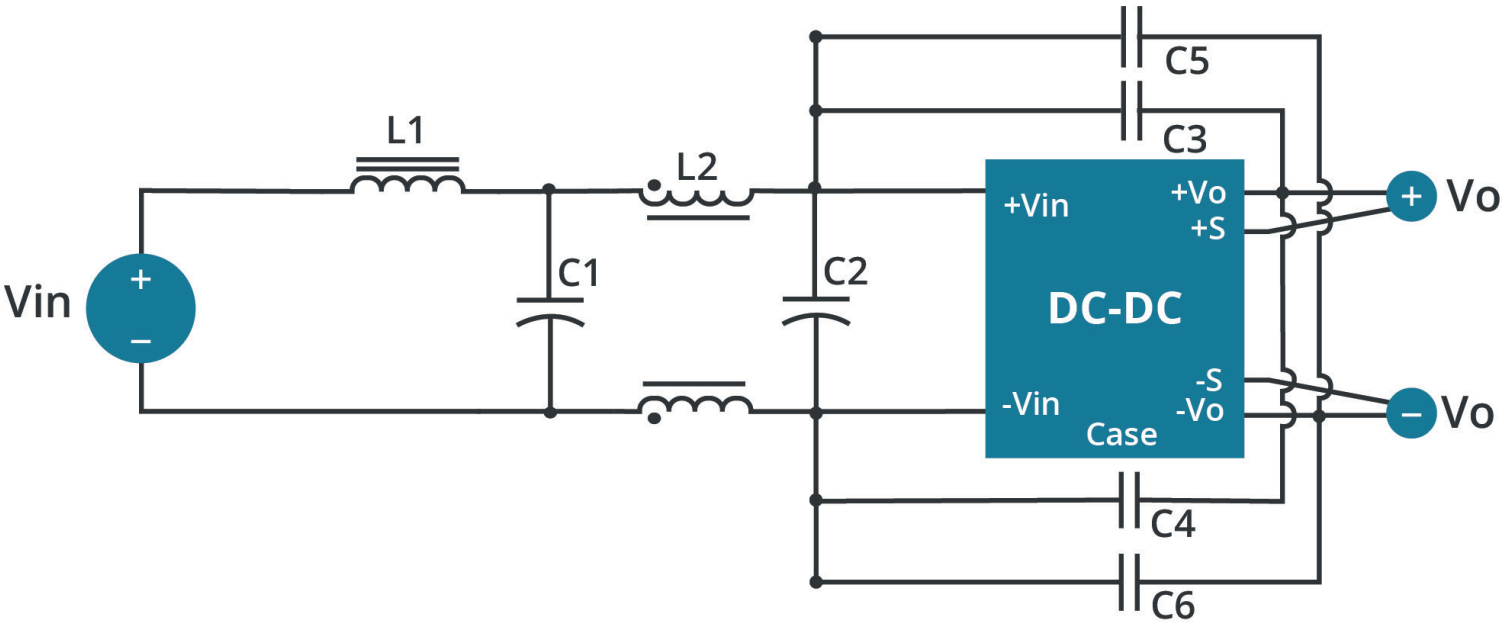

Table 2
Class A Recommended Components

Model	C1[1]	C2[1]	C3[2]	C4[2]	C5[2]	C6[2]	L1	L2
VHK150W-Q24-S5	100 µF/50 V	100 µF/50 V	NC	NC	NC	NC	SHORT	0.5 mH
VHK150W-Q24-S12	100 µF/50 V	100 µF/50 V	NC	NC	NC	NC	SHORT	0.5 mH
VHK150W-Q24-S15	100 µF/50 V	100 µF/50 V	NC	NC	NC	NC	SHORT	0.5 mH
VHK150W-Q24-S24	100 µF/50 V	100 µF/50 V	680 pF	680 pF	470 pF	680 pF	SHORT	0.5 mH
VHK150W-Q24-S28	100 µF/50 V	100 µF/50 V	2200 pF	NC	680 pF	2200 pF	SHORT	0.6 mH
VHK150W-Q24-S48	100 µF/50 V	100 µF/50 V	1000 pF	NC	470 pF	1000 pF	SHORT	0.6 mH
VHK150W-Q48-S5	47 µF/100 V	47 µF/100 V	NC	NC	NC	NC	SHORT	0.5 mH
VHK150W-Q48-S12	47 µF/100 V	47 µF/100 V	NC	680 pF	NC	NC	SHORT	0.5 mH
VHK150W-Q48-S15	47 µF/100 V	47 µF/100 V	680 pF	1000 pF	NC	NC	SHORT	0.5 mH
VHK150W-Q48-S24	47 µF/100 V	47 µF/100 V	680 pF	680 pF	470 pF	680 pF	SHORT	0.5 mH
VHK150W-Q48-S28	47 µF/100 V	47 µF/100 V	2200 pF	NC	680 pF	2200 pF	SHORT	0.6 mH
VHK150W-Q48-S48	47 µF/100 V	47 µF/100 V	2200 pF	1500 pF	1500 pF	2200 pF	SHORT	0.5 mH

Notes: 1. Aluminum capacitor
2. Ceramic capacitor

EMC RECOMMENDED CIRCUITS (CONTINUED)

EN55022 CLASS B

Figure 3
Recommended Circuit for EN55022 Class B

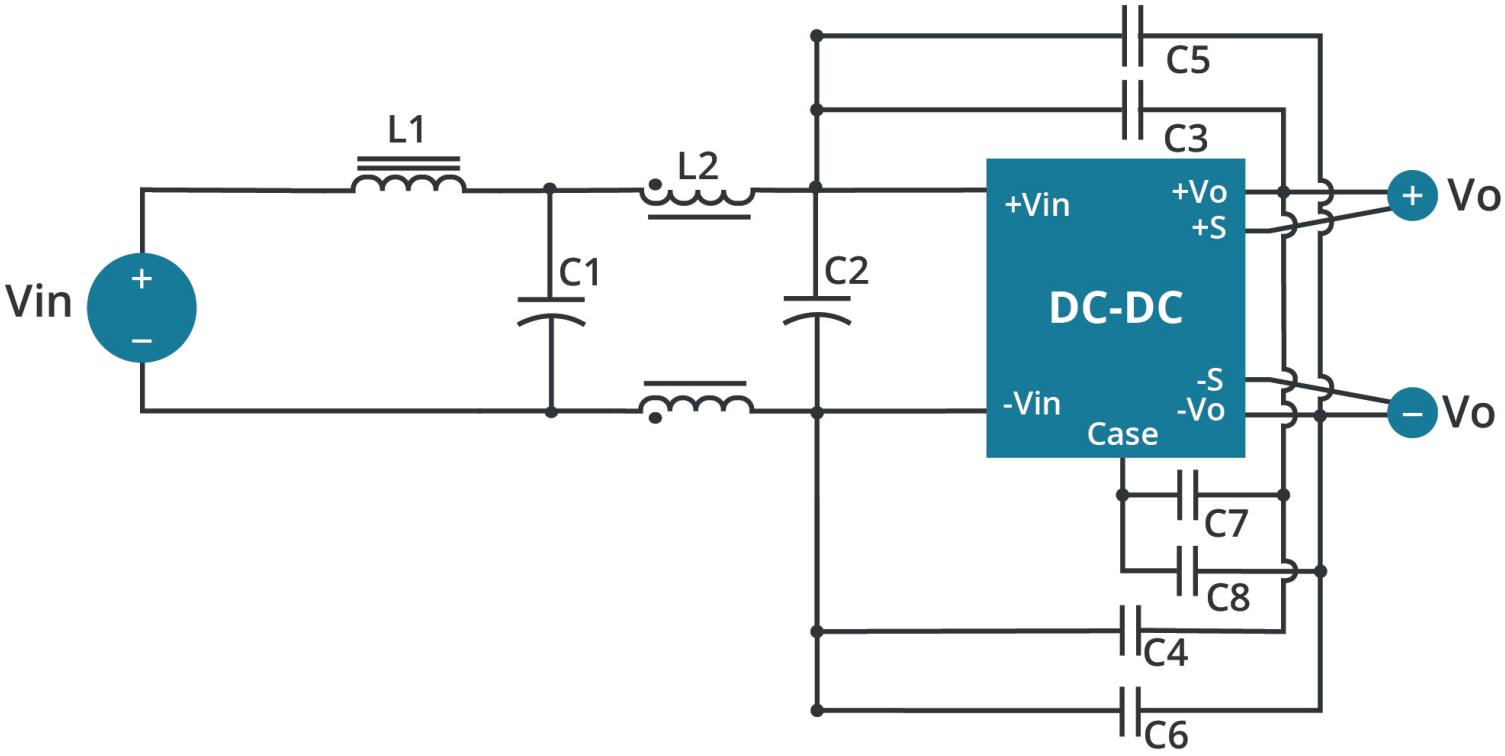

Table 3
Class B Recommended Components

Model	C1[1]	C2[1]	C3[2]	C4[2]	C5[2]	C6[2]	C7[2]	C8[2]	L1	L2
VHK150W-Q24-S5	220 µF/50 V	220 µF/50 V	680 pF	NC	NC	NC	NC	NC	3 µH	0.5 mH
VHK150W-Q24-S12	220 µF/50 V	220 µF/50 V	680 pF	680 pF	NC	NC	NC	NC	3 µH	0.5 mH
VHK150W-Q24-S15	220 µF/50 V	220 µF/50 V	680 pF	NC	NC	NC	NC	NC	3 µH	0.5 mH
VHK150W-Q24-S24	220 µF/50 V	220 µF/50 V	1000 pF	1000 pF	470 pF	680 pF	470 pF	330 pF	3 µH	0.5 mH
VHK150W-Q24-S28	220 µF/50 V	220 µF/50 V	2200 pF x2	1000 pF	470 pF	2200 pF x2	470 pF	470 pF	3.4 µH	0.6 mH
VHK150W-Q24-S48	220 µF/50 V	220 µF/50 V	2200 pF x4	1000 pF	1000 pF	2200 pF x4	NC	NC	3.4 µH	0.6 mH
VHK150W-Q48-S5	120 µF/100 V	120 µF/100 V	NC	680 pF	NC	NC	NC	NC	3 µH	0.5 mH
VHK150W-Q48-S12	120 µF/100 V	120 µF/100 V	NC	680 pF	NC	NC	NC	NC	3 µH	0.5 mH
VHK150W-Q48-S15	120 µF/100 V	120 µF/100 V	1000 pF	1000 pF	470 pF	1000 pF	330 pF	680 pF	3 µH	0.5 mH
VHK150W-Q48-S24	120 µF/100 V	120 µF/100 V	1000 pF	1000 pF	470 pF	1000 pF	330 pF	680 pF	3 µH	0.5 mH
VHK150W-Q48-S28	120 µF/100 V	120 µF/100 V	1000 pF	1000 pF	470 pF	1000 pF	470 pF	470 pF	3.4 µH	0.6 mH
VHK150W-Q48-S48	82 µF/100 V	120 µF/100 V	2200 pF + 470 pF	1500 pF	1000 pF	2200 pF + 470 pF	NC	NC	SHORT	0.5 mH

Notes: 1. Aluminum capacitor
2. Ceramic capacitor

APPLICATION NOTES

1. **Output Voltage Trimming**
   Leave open if not used.

Figure 4

Trim up

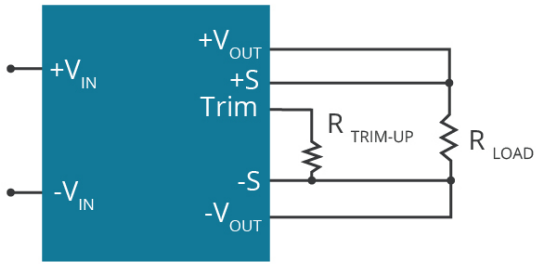

Trim down

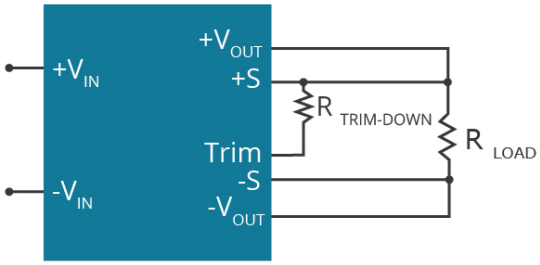

$$R_{TRIM} = \left(\frac{R_{TOP}\,(V_{REF} - V_F\,(\frac{R_{BOTTOM}}{R_{BOTTOM} + R_O}))}{V_{OUT} - V_{OUT,\,NOM}} \right) - \frac{R_{BOTTOM} R_O}{R_{BOTTOM} + R_O} \quad (K\,\Omega)$$

Formula for Trim up

$$R_{TRIM} = \frac{R_{TOP}\,(V_{OUT} - V_{REF})}{V_{OUT,\,NOM} - V_{OUT}} - R_{BOTTOM} \quad (K\,\Omega)$$

Formula for Trim down

Table 4

V_{NOM}	R_{TOP}	R_{BOTTOM}	R_O	V_{REF}	V_F
(Vdc)	(kΩ)	(kΩ)	(kΩ)	(V)	(V)
5	2.32	3.3	0	2.5	0
12	9.1	51	5.1	2.5	0.46
15	12	56	8.25	2.5	0.46
24	20	100	7.5	2.5	0.46
28	23.7	150	6.2	2.6	0.64
48	36	270	5.1	2.5	0.46

Note: Value for R_{TOP}, R_{BOTTOM}, R_O, V_{REF} ,and V_F refer to Table 4 (fixed internal values).
R_{TRIM}: Trim resistance
a: User-defined parameter, no actual meanings
V_{NOM}: Nominal output voltage
V_{OUT}: Target output voltage

Note: 1. All specifications are measured at Ta=25°C, nominal input voltage and full output load unless otherwise specified.

REVISION HISTORY

rev.	description	date
1.0	initial release	10/11/2006
1.01	new template applied	12/21/2011
1.02	misc. updates and corrections	03/13/2012
1.03	updated mechanical drawing	03/27/2012
1.04	V-Infinity branding removed	09/06/2012
1.05	added 28 V output models	11/05/2012
1.06	misc. updates, added 5 V output models for both 24 and 48 V inputs	11/16/2012
1.07	updated spec	03/14/2013
1.08	added trimming and EMI information	12/17/2013
1.09	updated spec	01/05/2015
1.10	updated derating curves	06/18/2015
1.11	company logo updated	02/08/2021
1.12	derating curve and circuit figures updated	09/07/2021
1.13	mechanical tolerance updated	04/13/2022
1.14	output voltage trimming updated	05/29/2023

The revision history provided is for informational purposes only and is believed to be accurate.

CUI INC
a bel group

Headquarters
20050 SW 112th Ave.
Tualatin, OR 97062
800.275.4899

Fax 503.612.2383
cui.com
techsupport@cui.com

CUI offers a two (2) year limited warranty. Complete warranty information is listed on our website.

CUI reserves the right to make changes to the product at any time without notice. Information provided by CUI is believed to be accurate and reliable. However, no responsibility is assumed by CUI for its use, nor for any infringements of patents or other rights of third parties which may result from its use.

CUI products are not authorized or warranted for use as critical components in equipment that requires an extremely high level of reliability. A critical component is any component of a life support device or system whose failure to perform can be reasonably expected to cause the failure of the life support device or system, or to affect its safety or effectiveness.